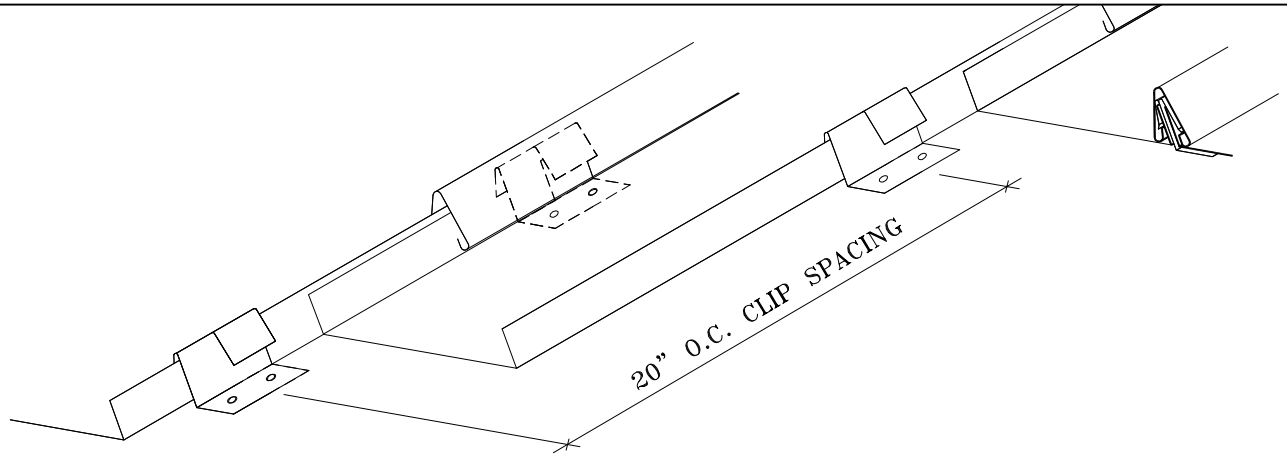

AVAILABLE MATERIALS: 24 GAUGE GALVANIZED ; .032" ALUMINUM
MINIMUM SLOPE: 3/12
PERFORMANCE/APPLICATION: INSTALL OVER SOLID SUBSTRATE WITH 30# FELT
TYPE: ARCHITECTURAL
MECHANICAL SEAMING: NO

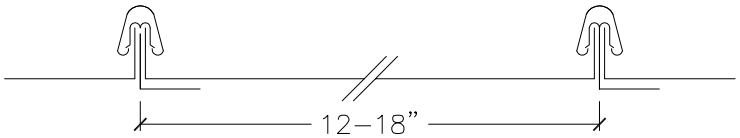

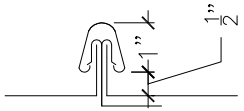

SEE STIFFENER AND VENTING DETAIL
SHEET SV–1 FOR FURTHER INFORMATION

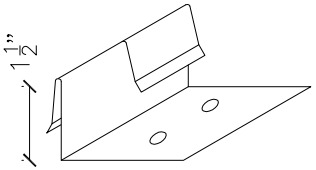

Met Fab	METAL FAB MANUFACTURING, LLC 7450 MONTEVIDEO RD, JESSUP, MD 20794 800-863-8322 410-799-9913 WWW.MET-FAB.COM	REVISIONS: 1 02/02/10 2	SHEET TITLE: CAP SEAM PANEL	SHEET: CS-1.5