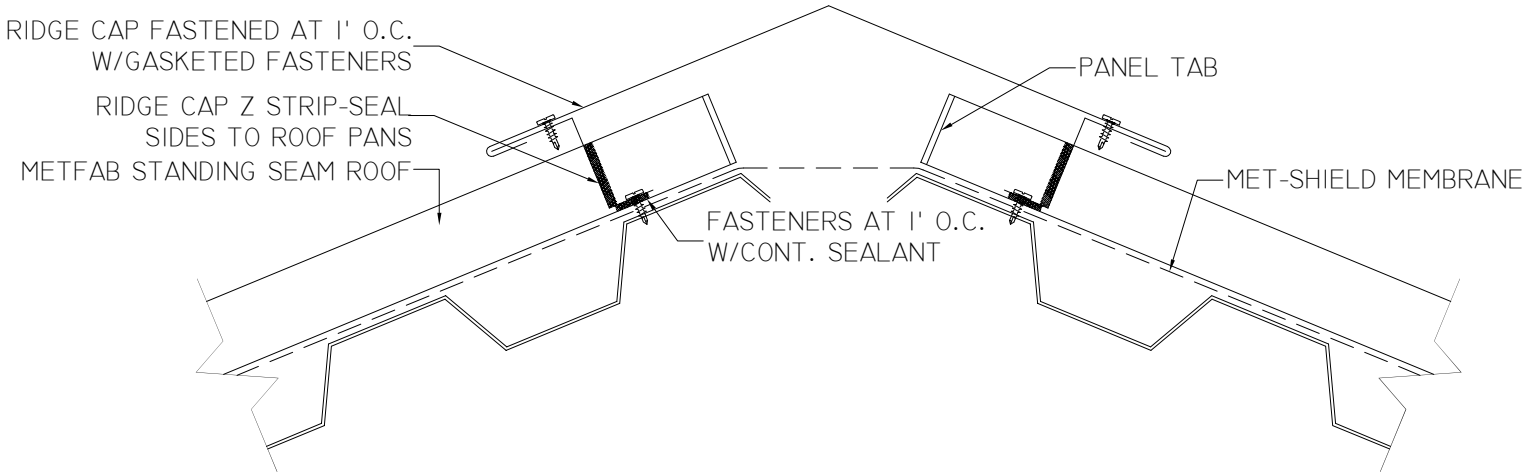

Met Fab	Metal Fab Manufacturing, LLC 7450 Montevideo Rd, Jessup, MD 20794 800-863-8322 410-799-9913 www.met-fab.com	REVISIONS: 1 02/02/10 2	SHEET TITLE: HIP CAP DETAIL	SHEET: HP-1